2.1
Distribution assemblies

- MBOX Series
- MEGA Series
- DOMINO Series
- BLOCK Series
- GOMMA Series
- TRASFORMER Series
- MOBIL Series
- SALVAMOTORE Series

2.1 DISTRIBUTION ASSEMBLIES

MBOX2 Series from page 218

Empty distribution assemblies

Surface mounting

Portable with cable and plug

MBOX3 Series from page 218

Empty distribution assemblies

Surface mounting

Portable with appliance inlet

MBOX5 Series from page 218

Empty distribution assemblies

Surface mounting

Transportable with appliance inlet

MEGA Series from page 226

Transportable

DOMINO Series from page 228

Empty distribution assemblies

Surface mounting

Portable with cable and plug

BLOCK Series from page 236

Empty distribution assemblies

Surface mounting

Portable with cable and plug

Mounted in an enclosed frame

GOMMA Series from page 242

Double-side units

Portable with cable and plug

TRANSFORMER Series from page 364

With safety and isolating transformer

SALVAMOTORE Series from page 367

Motor cut-out

DISTRIBUTION ASSEMBLIES FOR SPECIAL APPLICATIONS from page 342

MBOX2 Series distribution assemblies for campsites

MBOX3 distribution assemblies for public performance areas

3-way adaptor for campsites

DOMINO Series distribution assemblies for campsites

EMPY DISTRIBUTION ASSEMBLIES FLANGE 70x87

MBOX Series

Type	Housing	Power	With door	With light	Dissipated power (*)			WITH EMERGENCY PUSH BUTTON
MBOX2	6 sockets	16-32A	NO	NO	29W	1	**656.0026-000**	**656.0926-000**
		16-32A	NO	YES	29W	1	**656.0026-000L**	**656.0926-000L**

Type	Housing	Power	With door	With light	Dissipated power (*)		BLANK PLATE	WITH EMERGENCY PUSH BUTTON
MBOX3	9 sockets	16-32A	YES	YES	-	1	**657.0038-000**	**657.0938-000**

(*) According to CEI 23-49 italian standard.

Night & day

MBOX turns on a new era with a box that is even more functional and complete. The addition of an automatic device (LED with extremely low consumption hooked up to a sensor) ensures proper lighting of the compartment containing outlets and switch gear and protection devices when the outdoor light intensity diminishes. This allows the product to be identified and used under conditions of poor lighting: ideal for the worksite, MBOX is also perfect for campsites and parking areas.
Extremely compact and totally safe, MBOX features an innovative design and it is made in collision-proof and self-extinguishing technopolymer, to withstand collisions and atmospheric agents. In compliance with the highest safety standards, the MBOX series includes a complete product range and comes in many customized versions, with fast delivery.

Accessories
From page 138

Terminal blocks
From page 143

Flush mounting plugs and sockets
From page 56

Connector for electric vehicles
From page 84

Front operators
From page 190

EMPY DISTRIBUTION ASSEMBLIES FLANGE 136x125

MBOX Series

Type	Housing	Power	With door	With light	Dissipated power (*)		BLANK PLATE	WITH EMERGENCY PUSH BUTTON
MBOX2	4 sockets	16-32A	NO	NO	27W	1	**656.0024-000**	**656.0924-000**
		16-32A	NO	YES	27W	1	**656.0024-000L**	**656.0924-000L**

Type	Housing	Power	With door	With light	Dissipated power (*)		BLANK PLATE	WITH EMERGENCY PUSH BUTTON
MBOX3	5 sockets	16-32-63A	NO	YES	-	1	**657.0035-000**	**657.0935-000**
	6 sockets	16-32A	YES	YES	-	1	**657.0036-000**	**657.0936-000**

Type	Housing	Power	With door	With light	Dissipated power (*)		BLANK PLATE	WITH EMERGENCY PUSH BUTTON
MBOX5	12 sockets	16-32A	YES	YES	-	1	**658.0050-000**	**658.0950-000**

(*) According to CEI 23-49 italian standard.

ScameOnLine

Discover the **new application** directly on the web, www.scame.com/Combiwizard.asp

You will quickly find an assemblies already assembled, certified and ready to use.

Sochets for domestic applications
From page 80

Switched socket outlets with interlock
From page 92

Interlocked socket for domestic use
From page 90

Switch-disconnectors
From page 196

INDUSTRIAL SOCKETS

MBOX Series

		OUTPUT UNIT														POWER SUPPLY			
		INDUSTRIAL SOCKETS									OUTPUT PROTECTION					INPUT PROTECTION			
		16A				32A			63A		MCB					RCD	Main switch		Power
											16A				32A	30mA	SW DISC.	MCB	MAX
N° Sockets	Type	2P	2P+E	3P+E	3P+N+E	2P+E	3P+E	3P+N+E	3P+E	3P+N+E	1P	2P	3P	4P	3P	A	A	A	kW (▲)
6	MBOX2		6									6				40		32	**18**
			4	2								3	1			40		32	**18**
9	MBOX3		9								9					63		63	**35**
			5	2	2						5		2			63		63	**35**
			3	2	2		1	1			3		2		2	63		63	**35**

	INPUT UNIT						
	WITH TERMINAL BLOCK			WITH PLUG			
				Plug			
With door	Polarity	IP66	and emergency push button-IP65	Polarity	A	IP66	and emergency push button-IP65
	3P+N+E	**656.7026-639**	**656.7926-639**	3P+N+E	32	**656.7126-639**	**656.7826-639**
	3P+N+E	**656.7026-640**	**656.7926-640**	3P+N+E	32	**656.7126-640**	**656.7826-640**
x				3P+N+E	63		**657.8839-825**
x				3P+N+E	63		**657.8839-826**
x				3P+N+E	63		**657.8839-827**

MBOX2 Series

MBOX3 Series

Distribution ACS
- The protection at the sockets is realized for the most part with MCB switches.
- Available sockets: EUREKA Series.
- The version with terminal block are supplied with wall bracket kit.
- The version with cable and plug are supplied with a cable support kit.
- Versions with "Type A" RCD switch are also available on request.

ScameOnLine

Discover the **new application** directly on the web, www.scame.com/CombiFinder.asp

You will quickly find an assemblies already assembled, certified and ready to use.

COMBIFINDER

Note

This is just a small selection of our full range. Please contact your SCAME dealer for specific versions.

MCB = Miniature circuit breaker.
SW DISC. = Switch-disconnector.
RCD = Residual current device.
(▲) Power drawable when not in continuous service.

Night & Day
Standard on all version MBOX3 and MBOX5.
On request on MBOX2 versions.

EUROPEAN STANDARD EN 60 439-4 CEI 17-13/4
ASC
Assemblies for construction sites

INTERLOCKED SOCKET WITHOUT FUSES

MBOX Series

		OUTPUT UNIT														POWER SUPPLY			
		INTERLOCKED SOCKETS									OUTPUT PROTECTION					INPUT PROTECTION			
		16A				32A			63A		MCB					RCD	Main switch		Power
											16A				32A				
N° Sockets	Type	2P	2P+E	3P+E	3P+N+E	2P+E	3P+E	3P+N+E	3P+E	3P+N+E	1P	2P	3P	4P	3P	30mA	SW. DISC.	MCB	MAX
																A	A	A	kW (▲)
4	MBOX2		2	2							2		2			40		32	**18**
			2	1	1						2		2			40		32	**18**
			2	1			1				2		1			40		32	**18**
			2				1	1			2					40		32	**18**
	MBOX3		2	1			1				2		1		1	63		63	**35**
			2	2							2		2			40		32	**18**
5	MBOX3		2	2			1				2			1	1	63		63	**35**
			3	1			1						1		1	63		63	**35**
			2	2				1			2			1	1	63		63	**35**
			2	1			1		1		2		1		1	63		63	**35**
6	MBOX5		2	1	1			1		1	2		2		1(32) 1(63)	100		100	**55**
8			3	3			1				3		1		1(32) 1(63)	2x63 (1x40)		100	**55**
9			4		3			1		1	4		1		1	2x63		63	**35**
10			4		2			2		2	4		2			100		100	**55**
11			6		2			2		1	6		2		2(32) 1(63)	100		100	**55**

	INPUT UNIT						
	WITH TERMINAL BLOCK			WITH PLUG			
				Plug			
With door	Polarity	IP66	and emergency push button-IP65	Polarity	A	IP66	and emergency push button-IP65
	3P+N+E	**656.7024-008**	**656.7924-008**	3P+N+E	32	**656.7124-008**	**656.7824-008**
	3P+N+E	**656.7024-056**	**656.7924-056**	3P+N+E	32	**656.7124-056**	
	3P+N+E	**656.7024-006**	**656.7924-006**	3P+N+E	32	**656.7124-006**	**656.7824-006**
	3P+N+E	**656.7024-611**	**656.7924-611**	3P+N+E	32	**656.7124-611**	**656.7824-611**
x	3P+N+E	**657.8034-006**	**657.8934-006**	3P+N+E	63	**657.8134-006**	**657.8834-006**
x	3P+N+E	**657.8034-008**	**657.8934-008**	3P+N+E	32	**657.8134-008**	**657.8834-008**
x	3P+N+E	**657.8035-012**	**657.8935-012**	3P+N+E	63	**657.8135-012**	**657.8835-012**
x	3P+N+E	**657.8035-013**	**657.8935-013**	3P+N+E	63	**657.8135-013**	**657.8835-013**
x	3P+N+E	**657.8035-087**	**657.8935-087**	3P+N+E	63	**657.8135-087**	**657.8835-087**
	3P+N+E	**657.7035-017**	**657.7935-017**	3P+N+E	63	**657.7135-017**	**657.7835-017**
x	3P+N+E	**658.8056-138**	**658.8956-138**	3P+N+E	125	**658.8156-138**	**658.8856-138**
x	3P+N+E	**658.8058-040**	**658.8958-040**	3P+N+E	125	**658.8158-040**	**658.8858-040**
x	3P+N+E	**658.8059-043**	**658.8959-043**	3P+N+E	63	**658.8159-043**	
x	3P+N+E	**658.8050-702**	**658.8950-702**	3P+N+E	125	**658.8150-702**	**658.8850-702**
x	3P+N+E	**658.8050-705**	**658.8950-705**	3P+N+E	125		**658.8850-705**

MBOX2 Series

MBOX3 Series

MBOX5 Series

ScameOnLine

Discover the **new application** directly on the web, www.scame.com/CombiFinder.asp

You will quickly find an assemblies already assembled, certified and ready to use.

COMBIFINDER

Note

This is just a small selection of our full range. Please contact your SCAME dealer for specific versions.

Distribution Acs
- The protection at the sockets is realized for the most part with fuses.
- Available interlocked sockets: OMNIA Series with fuses (fam. 406), ADVANCE 2 Series with fuses (fam. 563).
- These panels are supplied with a fuse-testing device.
- The versions with terminal block are supplied with wall bracket kit.
- The version with cable and plug are supplied with a cable support kit (MBOX2 only).
- Versions with "Type A" RCD switch are also avilable on request.

For the blackened versions, the current drawable from the socket is less than its rated current (request the eletrical diagram from the Scame technical service)
MCB = Miniature circuit breaker.
SW. DISC. = Switch-disconnector.
RCD = Residual current device.
(▲) Power drawable when not in continuous service.

Night & Day
Standard on all version MBOX3 and MBOX5.
On request on MBOX2 versions.

EUROPEAN STANDARD EN 60 439-4 CEI 17-13/4
ASC
Assemblies for construction sites

SPECIFIC DISTRIBUTION ASSEMBLIES FOR CAMPSITES - IP66

MBOX Series

Type	N° Sockets	Type of socket		
MBOX2	4 OMNIA series sockets	2P+E-16A-250V~	1	656.9024-613
	4 EUREKA series sockets	2P+E-16A-250V~	1	656.9024-614

- Turret not supplied.
- Components: OMNIA and EUREKA panel mounting sockets.
- Distribution assemblies provided with front and smooth plate.
- Magnetothermal protection: 16A for each socket.
- Differential protection: 30mA for each socket.
- Supplied complete with light.

SPECIFIC DISTRIBUTION ASSEMBLIES FOR PUBLIC AREAS

MBOX Series

Type	N° Sockets	Type of socket	Main witch		
MBOX2	6 sockets EUREKA Series	2x2P+E-16A-250V~+1MT 16A 2P	1DIFF 40A 1MCB 32A 18KW 3P+N+E Terminal Box input unit	1	656.7026-665
		3x3P+N+E-16A-400V~+1MT 16A 4P			
		1x3P+N+E-32A-400V~			
MBOX3 (P)	6 sockets OMNIA Series	4x2P+E-16A-250V~ + FUSE	1DIFF 40A 1MCB 32A 18KW 3P+N+E Plug 32A	1	657.6136-100
		1x3P+N+E-16A-400V~ + FUSE			
		1x3P+N+E-32A-400V~			
MBOX5 (P) (E)	6 sockets OMNIA Series	3x2P+E-16A-250V~ + FUSE	1DIFF 40A 1MCB 100A 55KW 3P+N+E Terminal Box input unit	1	658.6956-216
		2x3P+N+E-32A-400V~ + FUSE			
		1x3P+N+E-63A-400V~ + FUSE			

(P) With door.
(E) With emergency push button.
- Differential protection: 30mA.
- Versions with light upon request.

DISTRIBUTION ASSEMBLIES WITH OUTLET UNIT WITH TERMINAL BLOCKS

MBOX Series

Type	Inlet unit	Outlet units		
MBOX3	100A 4P	3x63A	1	(P) 657.8033-501
	80A 4P	1x16A	1	(P) 657.8034-515
		1x32A		
		2x63A		

- Version with light upon request.

(P) With door.

STAND KIT

MBOX Series

Type		
MBOX2	1	656.0120
MBOX3 - MBOX5	1	657.0121

TURRET FIXING KIT FOR MBOX2

MBOX Series

Description		
Post with panel fixing plate handle cover threaded blocks and screws for panel-turret assembly	1	656.0220
Optional steel back closing plate	1	656.0221
Optional plate for fixing the turret into concrete (provided with anchoring brackets and stud bolts)	1	656.0222

DISTRIBUTION ASSEMBLIES

MEGA Series

OUTPUT UNIT																			POWER SUPPLY	INPUT UNIT							
INTERLOCKED SWITCH SOCKETS OUTLET												TERMINAL BLOCK								POWER SUPPLY							
	16A				32A	63A		125A		400A	16A	20A	32A	63A	100A	160A	400A										
N° Sockets	2P	2P+E	3P+E	3P+N+E	3P+N+E	3P+E	3P+N+E	3P+E	3P+N+E	3P+N+E	380V 4P							Padlockable main switch (4P)	Terminal block mm²	Power MAX (▲) (Kw)	Short-circuit current (Icw) (KA)	Short-circuit current (Icc) (KA)	Emergency push button	Stand type	Weight Kg	
4														2(•)	1(•)	1(•)		SW. DISC. 630A	4 x 160	230	20			C	210	661.0314-017
					1		3											SW. DISC. 250A	4 x 100	130	8,5			A	120	661.5250-066
7													2	4[3]	1(125A)(•)			MCB 250A	4 x 160	150		15	x	C	170	661.0250-042
		2	2		2		1				1 (10A-2P) 1							SW. DISC. 250A	4 x 100	110	8,5			A	110	661.5250-007
8		2	2		2		1		1(•)									SW. DISC. 400A	4 x 160	200	20			C	150	661.0314-011
9											2 (2P) 2		2	2	1 (125A)(•)			SW. DISC. 400A	4 x 160	200	20			C	200	661.0400-021
		2	2		2		1							1(•)	1 (125A)(•)			MCB 250A>	4 x 100	150		10		C	20	661.0400-009
11		4	4										1[4] 1 (3P)[4]	1[4]				MCB 160A	4 x 100	90		10	x	C	150	661.0160-075
		2	2								4 (2P)		1 (40A)	1 (50A)	1 (80A)			MCB 160A	4 x 100	90		10		B	130	661.0160-057
12	2	4	2		2		1		1(•)									SW. DISC. 400A	4 x 160	200	20			C	220	661.0314-015
14		1	1	1	1 (3P+E)								1[4]	6 (40A)[4] 3[4]				SW. DISC. 630A	4 x 250	300	20			C	200	661.0630-047

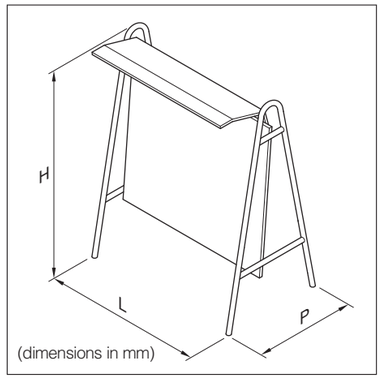

Stand Dimension

Type	L	P	H
A	1050	760	1500
B	1190	872	1600
C	1810	872	1600

Note

This is just a small selection of our full range. Please contact your SCAME dealer for specific versions.

ScameOnLine

Discover the **new application** directly on the web, www.scame.com/Combifinder.asp

COMBIFINDER

You will quickly find an assemblies already assembled, certified and ready to use.

Distribution ACS

- Outputs protected individually or in groups by magnetothermal switch and by differential switch 0.03A (a note in the legend indicates a different operating current).
- 24V sockets protected with magnetothermal switch or fuses suited to the transformer power.
- Power supply: 3P+N+E 400V 50Hz.
- Main terminal block for "In-Out" connection.

[1] Protection made by fuse
[2] RCD 0,5A
[3] RCD 0,3A sel.
[4] RCD 0,3A
[5] RCD 1A sel.
[6] RCD 0,5A sel.

(▲) Differential switch for terminal block protection not in continuous service.
(•) Maximum power with a 0.5-0.7 simultanetly factor.
SW. DISC.= Switch-disconnector.
MCB = Miniature circuit breaker.

EUROPEAN STANDARD EN 60 439-4 CEI 17-13/4 ASC Assemblies for construction sites

MODULAR ENCLOSURE

Module	DIN modules (17,5mm)	Dimensions hxbxp (mm)	Dissipated power (*)		BLANK FRONT PANEL
M150		150x256x115	18W	1/6	672.1101
		150x328x115	20W	1/6	672.1100

Module	DIN modules (17,5mm)	Dimensions hxbxp (mm)	Dissipated power (*)		BLANK FRONT PANEL
M340	8	340x184x140	14W	1/10	672.2100

Module	DIN modules (17,5mm)	Dimensions hxbxp (mm)	Dissipated power (*)		BLANK FRONT PANEL
M400	12	400x256x140	22W	1/6	672.3100
	16	400x328x140	28W	1/4	672.4116

Module	DIN modules (17,5mm)	Dimensions hxbxp (mm)	Dissipated power (*)		BLANK FRONT PANEL
M550	16	550x328x140	28W	1/3	672.5116
	24	550x477x140	28W	1/2	672.5122

(*) According to CEI 23-49 italian standard.

Socket	PANEL FLANGE 70x87
2 (•)	672.1301
3 (•)	672.1300

Socket	PANEL FLANGE 136x125 (#)
2	672.1200

Socket	PANEL FLANGE 70x87
1 (◆)	672.2301
2 (■)	672.2300

Socket	PANEL FLANGE 136x125
1	672.2200

Socket	PANEL FLANGE 70x87
1 (▲)	672.3302
2 (•)	672.3300
3 (•)	672.4316

Socket	PANEL FLANGE 136x125 (*)
1	672.3200
2	672.4216

Socket	PANEL FLANGE 70x87
6 (•)	672.5616
8 (•)	672.5822

Socket	PANEL FLANGE 136x125 (*)
3	672.5316 (Δ)
4	672.5416
5	672.5522
6	672.5622

(•) 16A (70x87mm) or, with suitable adaption, 32A socket (84x106mm).
(▲) 63A (100x110mm).
(■) 16A (70x87mm).
(◆) 32A (84x106mm).

(*) Connection device to be fixed in the upper side.
(Δ) With cutouts to contain 2 OMNIA Series 16A or 32A and 1 OMNIA Series 63A.

Accessories
From page 138

Terminal blocks
From page 143

Flush mounting plugs and sockets
From page 56

Connector for electric vehicles
From page 84

Front operators
From page 190

Sochets for domestic applications
From page 80

Switched socket outlets with interlock
From page 92

Interlocked socket for domestic use
From page 90

Switch-disconnectors
From page 196

VERSIONS WITH 2 INTERLOCKED-SWITCH SOCKET OUTLETS

DOMINO Series

AVAILABLE SOCKETS - 16A			POWER SUPPLY		PROTECTION DEVICES						PORTABLE WITH CABLE AND IEC309 PLUG	
2P+E	3P+E	3P+N+E	Current	Poles	Main MCB	Main RCD 30mA	MCB 16A 1P	MCB 16A 2P	MCB 16A 3P	MCB 16A 4P	IP44	IP66
2			16A	2P+E	2P 16A	2P 25A	3				670.3026-77	670.3526-77
	2			3P+E								
1	1			3P+N+E	4P A	4P 25A					670.3026-75	

These assemblies comply with EN 60439-4 standard.
Particular requirements for assemblies for construction sites (ACS).

PROTECTION DEVICES				SURFACE MOUNTING		PROTECTION DEVICES	SURFACE MOUNTING PARTLY WIRED	
MCB 16A 1P	MCB 16A 2P	MCB 16A 3P	MCB 16A 4P	IP44	IP66	(none)	IP44	IP66
2				671.3020-77		partly wired		
		2						
1		1		671.3020-75	671.3520-75		671.3025-75	

VERSIONS WITH 4 INTERLOCKED-SWITCH SOCKET OUTLETS

DOMINO Series

AVAILABLE SOCKETS - 16A			POWER SUPPLY		PROTECTION DEVICES						PORTABLE WITH CABLE AND IEC309 PLUG	
2P+E	3P+E	3P+N+E	Current	Poles	Main MCB	Main RCD 30mA	MCB 16A 1P	MCB 16A 2P	MCB 16A 3P	MCB 16A 4P	IP44	IP66
2	2		16A	3P+N+E	4P 16A	4P 25A					670.6046-03	670.6546-03
2		2		3P+N+E	4P 16A	4P 25A						
3	1			3P+N+E	4P 16A	4P 25A					670.6046-08	
1	3			3P+N+E	4P 16A	4P 25A						
4				2P+E	2P 16A	2P 25A					670.6046-12	670.6546-12
2	1+1 (#)		32A	3P+N+E	4P 32A	4P 40A		1	1		670.6047-314	

(#) 32A socket
These assemblies comply with EN 60439-4 standard.
Particular requirements for assemblies for construction sites (ACS).

PROTECTION DEVICES				SURFACE MOUNTING		PROTECTION DEVICES	SURFACE MOUNTING PARTLY WIRED	
MCB 16A 1P	MCB 16A 2P	MCB 16A 3P	MCB 16A 4P	IP44	IP66	(none)	IP44	IP66
2		2		671.6040-03		partly wired	671.6045-03	671.6545-03
2			2				671.6045-06	
							671.6045-08	
1		3		671.6040-07			671.6045-07	
4				671.6040-95			671.6045-95	671.6545-95
2		1+1 (#)			671.6540-317			

(#) 32A socket

Distribution ACS
- OMNIA Series interlocked-switch socket outlets
- 4 m rubber cable H07RN-F
- :1

EUROPEAN STANDARDS EN 60 439-4 ASC Assemblies for costruction sites

Note

This is just a small selection of our full range. Please contact your SCAME dealer for versions with other industrial or domestic socket outlets (Italian, German, British, French and other international standards).

VERSIONS WITH 3 INDUSTRIAL SOCKET OUTLETS

DOMINO Series

AVAILABLE SOCKETS - 16A				POWER SUPPLY		PROTECTION DEVICES						PORTABLE WITH CABLE AND IEC309 PLUG	
2P+E	3P+E	3P+N+E	2P+E	Current	Poles	Main MCB	Main RCD 30mA	MCB 16A 1P	MCB 16A 2P	MCB 16A 3P	MCB 16A 4P	IP44	IP66
3				16A	2P+E	2P 16A	2P 25A	(3)					670.3536-62
2	1				3P+N+E	4P 16A	4P 25A	(2)		(1)			670.3536-59
1	1	1				4P 16A	4P 25A						

PROTECTION DEVICES				SURFACE MOUNTING		PROTECTION DEVICES	SURFACE MOUNTING PARTLY WIRED	
MCB 16A 1P	MCB 16A 2P	MCB 16A 3P	MCB 16A 4P	IP44	IP66	(none)	IP44	IP66
3				671.3030-97	671.3530-97	partly wired	671.3035-97	671.3535-97
2		1		671.3030-59	671.3530-59		671.3035-59	671.3535-59
1		1	1	671.3030-99				

VERSIONS WITH 6 INDUSTRIAL SOCKET OUTLETS

DOMINO Series

AVAILABLE SOCKETS - 16A				POWER SUPPLY		PROTECTION DEVICES						PORTABLE WITH CABLE AND IEC309 PLUG	
2P+E	3P+E	3P+N+E	2P+E	Current	Poles	Main MCB	Main RCD 30mA	MCB 16A 1P	MCB 16A 2P	MCB 16A 3P	MCB 16A 4P	IP44	IP66
3	3			16A	3P+N+E	4P 16A	4P 25A	(3)		(1)			670.6566-117
6				32A		-	4P 40A	6				670.6066-126	670.6566-126
3	3					-	4P 40A	3		1		670.6066-137	670.6566-137

PROTECTION DEVICES				SURFACE MOUNTING		PROTECTION DEVICES	SURFACE MOUNTING PARTLY WIRED	
MCB 16A 1P	MCB 16A 2P	MCB 16A 3P	MCB 16A 4P	IP44	IP66	(none)	IP44	IP66
3		3			671.6560-117	partly wired	671.6065-117	671.6565-117

Distribution ACS
- EUREKA Series industrial socket outlets
- 4 m rubber cable H07RN-F
- ⊡:1

◯ Switch-disconnectors
These assemblies comply with EN 60439-4 standard.
Particular requirements for assemblies for construction sites (ACS).

EUROPEAN STANDARDS EN 60 439-4 ASC Assemblies for costruction sites

ScameOnLine

Discover the **new application** directly on the web, www.scame.com/CombiFinder.asp

You will quickly find an assemblies already assembled, certified and ready to use.

COMBIFINDER

Note

This is just a small selection of our full range. Please contact your SCAME dealer for versions with other industrial or domestic socket outlets (Italian, German, British, French and other international standards).

OUTLET UNIT WITH TERMINAL BLOCKS VERSION

DOMINO Series

Rated current	Power supply	Breaking capacity (*)	Power output (max)	Cable (max)		WITHOUT EMERGENCY STOP PUSH BUTTON	WITH EMERGENCY STOP PUSH BUTTON
125A	3P+N (400V)	16KA/400V (**)	70KW	50mm²(PG36)	1	**671.2012-001 (•)**	**671.2912-001 (•)**
100A		15KA/400V	55KW	35mm²(PG36)	1	**671.2012-002 (◊)**	**671.2912-002 (•)**
63A		10KA/400V	35KW	25mm²(PG36)	1	**671.2012-003 (•)**	**671.2912-003 (•)**
32A		10KA/400V	18KW	25mm²(PG29)	1	**671.2012-004 (◊)**	**671.2912-004 (◊)**
80A		16KA/400V (***)	45KW	50mm²(PG36)	1	**671.2016-008 (•)**	
16A		10KA/400V	9KW	25mm²(PG21)	1	**671.2012-006 (◊)**	
32A	1P+N (230V)	10KA/230V	6KW	25mm²(PG29)	1	**671.2012-009 (◊)**	
16A		10KA/230V	3KW	25mm²(PG21)	1	**671.2012-005 (◊)**	

Note: no earthing is required for this assembly.
(*) A protection device must be installed to protect loads >30kW, with the relevant fault level breaking capacity (KA)
(**) MCB protection devices (thermoplastic release with fixed storage calofier and threshold).
(***) Thermoplastic release with adjustable storage calofier and threshold.

(•) Consumer unit 16 DIN
(◊) Consumer unit 12 DIN

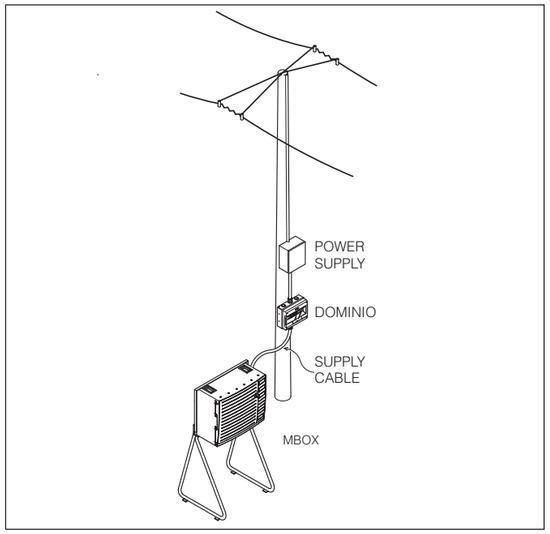

Final distribution assembly ACS
- Distribution assembly intended for the main power supply cable protection in a building site
- In particular protects the part of the cable that runs from the electrical supply to the building site's distribution assembly
- It should be installed at the beginning of the line, just downstream of the power supply outlet
- Protection devices RCD and MCB
- Power: 380/415 V - 3P+N
- Accessories supplied: yale lock and fixing brackets

VERSIONS WITH 6 INDUSTRIAL SOCKET OUTLETS - IP66

DOMINO Series

AVAILABLE SOCKETS - 16A				POWER SUPPLY		SAFETY TRANSFORMER			PROTECTION DEVICES					PORTABLE WITH CABLE AND IEC309 PLUG
2P	2P+E	3P+E	3P+N+E	Current	Poles	Rating (VA)	MCB 1P prim.	MCB 1P sec.	RCD 30mA	MCB 16A 1P	2P	3P	4P	
3	2	1		16A	3P+N+E	300	3A	10A	4P 25A	(2)		(1)	1	**670.6569-148**
3	3				2P+E	300	3A	10A	2P 25A	(3)	1			**670.6569-149**

◯ Switch-disconnectors

These assemblies comply with EN 60439-4 standard.
Particular requirements for assemblies for construction sites (ACS).

VERSIONS WITH 6 INDUSTRIAL SOCKET OUTLETS AND SAFETY TRANSFORMER - IP44

DOMINO Series

AVAILABLE SOCKETS - 16A				POWER SUPPLY		SAFETY TRANSFORMER			PROTECTION DEVICES					PORTABLE WITH CABLE AND IEC309 PLUG
2P	2P+E	3P+E	3P+N+E	Current	Poles	Rating (VA)	MCB 1P prim.	MCB 1P sec.	RCD 30mA	MCB 16A 1P	2P	3P	4P	
3	2	1		16A	3P+N+E	300	3A	10A	4P 25A	(2)		(1)	1	**670.6069-148**
3	3				2P+E	300	3A	10A	2P 25A	(3)	1			**670.6069-149**

◯ Switch-disconnectors

These assemblies comply with EN 60439-4 standard.
Particular requirements for assemblies for construction sites (ACS).

ScameOnLine

Discover the **new application** directly on the web, www.scame.com/CombiFinder.asp

You will quickly find an assemblies already assembled, certified and ready to use.

COMBIFINDER

Note

This is just a small selection of our full range. Please contact your SCAME dealer for versions with other industrial or domestic socket outlets (Italian, German, British, French and other international standards).

Distribution ACS
- Industrial socket outlets EUREKA Series
- Safety transformer 220/24V~ - SELV
- 4 m rubber cable H07RN-F.
- :1

EUROPEAN STANDARDS EN 60439-4 IEC 60439-4 ACS Assemblies for costruction sites

ENCLOSURE

BLOCK Series

Description	DIN modules	Dimensions (mm)	Dissipated power (*)		BLANK PANEL	Socket outlets	PANEL FLANGE 70x87
BLOCK1	4	110x280x95	8W	1	**632.1510-000**	1	**632.1500-000**

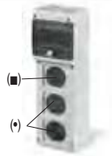

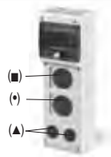

Description	DIN modules	Dimensions (mm)	Dissipated power (*)		BLANK PANEL	Socket outlets	PANEL FLANGE 70x87
BLOCK3	6	136x440x105	9W	1	**632.3510-000**	3	**632.3500-000**
		136x440x105	9W	1		4(2+2)	**632.3520-000**
		136x440x105	9W	1		6	**632.3530-000**

Description	DIN modules	Dimensions (mm)	Dissipated power (*)		BLANK PANEL	Socket outlets	PANEL FLANGE 70x87
BLOCK3	blank	136x440x105	9W	1	**632.3511-000**	4	**632.3501-000**

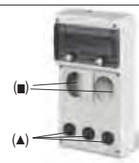

Description	DIN modules	Dimensions (mm)	Dissipated power (*)		BLANK PANEL	Socket outlets	PANEL FLANGE 70x87
BLOCK4	11	212x415x105	14W	1	**632.4510-000**	4	**632.4500-000**
		212x415x105	14W	1 (♦)	**632.4710-000**	4 (♦)	**632.4700-000**
		212x415x105	14W	1		5(2+3)	**632.4520-000**
		212x415x105	14W	1		6(2+4)	**632.4530-000**

Description	DIN modules	Dimensions (mm)	Dissipated power (*)		BLANK PANEL	Socket outlets	PANEL FLANGE 70x87
BLOCK5	14	272x414x110	15W	1	**632.5510-000**	5	**632.5500-000**
		272x414x110	15W	1		7	**632.5520-000**

(*) According to CEI 23-49 italian standard.
(♦) With YALE look.
(•) 70x87 mm cut-outs.
(▲) 50x60 mm cut-outs.
(■) Cut-outs suitable for 32A socket outlets with 84x106 mm flange.
(x) Does not accept COMMAND 63A Series Switches and higher.

ACCESSORIES

ACCESSORIES

Description	Flange					
Plate for panel cut-outs	70x87	25	**654.0100**	**654.0101(*)**	**654.0101Y(*)**	**654.0102(*)**
	50x60	25	**654.0105**			

(*) For components TOP22 Series.

Description		
Terminal blocks without insulated base - IP00 for BLOCK4	10/100	**654.0349**

- Terminals: 1x (5x10mm² e 5x16mm²).

Description		
Stand for BLOCK4 distribution assemblies	2	**654.0600**

- Made of zinc-plated steel.
- Distribution assemblies fastened by screws.
- Portable.

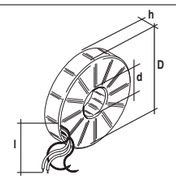

Description		D	d	h	l		
Safety toroidal transformer	220/24V - class F - 150VA	170	45	25	270	1	**654.0210**
	220/24V - class F - 300VA	170	39	38	270	1	**654.0220**

- Safety Extra Low Voltage (SELV).
- Cables: black 220V~, red 24V~.

Flush mounting plus and sockets
From page 56

Connector for electric vehicles
From page 84

Front operators
From page 190

Sochets for domestic applications
From page 80

VERSIONS WITH 3 SOCKET OUTLETS

BLOCK3 Series

AVAILABLE SOCKETS 16A			POWER SUPPLY		PORTABLE WITH CABLE AND PLUG				PORTABLE WITH CABLE AND PLUG			
2P+E	3P+E	2P+E	Current	Poles	Portable with cable and plug MCB protected version				Portable with cable and plug MCB+RCD protected version			
					MCB	IP44	IP66		MCB	RCD 30mA	IP44	IP66
2		1	16A	2P+E	2P 16A	630.3000-056			2P 16A	2P 25A	630.3006-056	630.3506-056(▲)
2	1			3P+N+E	4P 16A	630.3000-059	630.3500-059		4P 16A (•)		630.3006-059	630.3506-059
1	2				4P 16A	630.3000-060	630.3500-060		4P 16A (•)		630.3006-060	630.3506-060
3				2P+E	2P 16A	630.3000-062	630.3500-062		2P 16A	2P 25A	630.3006-062	630.3506-062
1	1+1(#)		32A	3P+N+E	4P 16A	630.3000-324	630.3500-324		4P 16A (•)		630.3006-324	630.3506-324

SURFACE MOUNTING			SURFACE MOUNTING				SURFACE MOUNTING	
Surface mounting MCB protected versions			Surface mounting MCB+RCD protected versions				Surface mounting without protection devices	
MT	IP44	IP66	MT	RCD 30mA	IP44	IP66	IP44	IP66
1+N 16A	632.3000-056		1+N 16A	4P 25A	632.3006-056		632.3005-056	
4P 16A	632.3000-059	632.3500-059	4P 16A (•)		632.3006-059	632.3506-059	632.3005-059	632.3505-059
4P 16A	632.3000-060	632.3500-060	4P 16A (•)		632.3006-060	632.3506-060	632.3005-060	632.3505-060
1+N 16A	632.3000-062	632.3500-062	1+N 16A	2P 25A	632.3006-062	632.3506-062	632.3005-062	632.3505-062
4P 16A	632.3000-324	632.3500-324	4P 16A (•)		632.3006-324	632.3506-324	632.3005-324	632.3505-324

VERSION WITH 4 SOCKET OUTLETS

BLOCK4 Series

AVAILABLE SOCKETS 16A			POWER SUPPLY		PORTABLE WITH CABLE AND PLUG				PORTABLE WITH CABLE AND PLUG			
2P+E	3P+E	3P+N+E	Current	Poles	MCB protected version				MCB+RCD protected version			
					MCB	IP44	IP66		MCB	RCD 30mA	IP44	IP66
2	2		16A		4P 16A	630.4000-003	630.4500-003		4P 16A	4P 25A	630.4006-003	630.4506-003
2		2		3P+N+E	4P 16A	630.4000-006	630.4500-006		4P 16A	4P 25A	630.4006-006	630.4506-006
3	1				4P 16A	630.4000-008	630.4500-008		4P 16A	4P 25A	630.4006-008	630.4506-008
4				2P+E	2P 16A	630.4000-012	630.4500-012		2P 16A	2P 25A	630.4006-012	630.4506-012
2	1+1(#)		32A	3P+N+E	4P 16A	630.4000-326	630.4500-326		4P 16A	4P 25A	630.4006-326	630.4506-326
2		1+1(#)			4P 16A	630.4000-328	630.4500-328		4P 16A	4P 25A	630.4006-328	630.4506-328

SURFACE MOUNTING			SURFACE MOUNTING				SURFACE MOUNTING	
Surface mounting MCB protected versions			Surface mounting MCB+RCD protected versions				Surface mounting without protection devices	
MT	IP44	IP66	MCB	RCD 30mA	IP44	IP66	IP44	IP66
4P 16A	632.4000-003	632.4500-003	4P 16A	4P 25A	632.4006-003	632.4506-003	632.4005-003	632.4505-003
4P 16A	632.4000-006	632.4500-006	4P 16A	4P 25A	632.4006-006	632.4506-006	632.4005-006	632.4505-006
4P 16A	632.4000-008	632.4500-008	4P 16A	4P 25A	632.4006-008	632.4506-008	632.4005-008	632.4505-008
2P 16A	632.4000-012	632.4500-012	1+N 16A	2P 25A	632.4006-012	632.4506-012	632.4005-012	632.4505-012
4P 16A	632.4000-326	632.4500-326	4P 16A	4P 25A	632.4006-326	632.4506-326	632.4005-326	632.4505-326
4P 16A	632.4000-328	632.4500-328	4P 16A	4P 25A	632.4006-328	632.4506-328	632.4005-328	632.4505-328

Distribution ACS
- ⊡:1
(#) 32A socket.
(•) Residual current circuit breaker with overcurrent protection (RCBO).
(▲) Pluristandard socket.
- 1,5 m rubber cable H07RN-F

These assemblies comply with EN60439-4 standard. Particular requirements for assemblies for construction sites (ACS).
Products with domestic standard sockets IP66 with plug inserted.

EUROPEAN STANDARDS EN 60 439-4 CEI 17-13/4 ACS Assemblies for costruction sites

ScameOnLine

Discover the **new application** directly on the web, www.scame.com/CombiFinder.asp

You will quickly find an assemblies already assembled, certified and ready to use.

COMBIFINDER

Note

This is just a small selection of our full range. Please contact your SCAME dealer for specific versions.

VERSION WITH 4 SOCKET OUTLETS MOUNTED IN AN ENCLOSED FRAME

BLOCK4 Series

AVAILABLE SOCKETS 16A					POWER SUPPLY		PROTECTION DEVICES		PORTABLE WITH CABLE AND PLUG	
2P+E	3P+E	3P+N+E	2P+E	2P+E	Current	Poles	MCB	RCD 30mA	MCB protected version IP44	MCB protected version IP66
2	2				16A	3P+N+E	4P 16A	4P 25A	630.4106-003	630.4606-003
2		2								
1	3									
3	1						4P 16A	4P 25A	630.4106-008	630.4606-008
4						2P+E	2P 16A	2P 25A	630.4106-012	630.4606-012
	4					3P+E	3P 16A	4P 25A	630.4106-013	630.4606-013

- Support with roof in steel: allows the distribution assembly to be sustained for a correct earth usage.
- 1,5mm rubber cable H07RN-F

DISTRIBUTION ASSEMBLIES STAND

BLOCK Series

Description		
For 1 BLOCK4 distribution assembly	2	654.0600

- Suitable for BLOCK4 distribution assemblies.
- Made of zinc-plated steel.
- Distribution assembly fastened by screws.
- Portable.

VERSION WITH 4 SOCKET OUTLETS AND SAFETY TRANSFORMER

BLOCK4 Series

AVAILABLE SOCKETS 16A			POWER SUPPLY		SAFETY TRANSFORMER				PROTECTION DEVICES					PORTABLE WITH CABLE AND PLUG	
2P	2P+E	3P+E	Current	Poles	Rating (VA)	MT prim. 2P	MT sec. 2P	mod. cod.	RCBO 30 mA	MCB 16A 1P	MCB 16A 2P	MCB 16A 3P	MCB 16A 4P	MCB protected version IP44	MCB protected version IP66
4			16A	2P+E	300	3A	10A	4						630.4009-014	630.4509-014
2	2				150	2A	5A	8	2P 16A(*)	(2)				630.4009-323	630.4509-323
2		2		3P+N+E	150	2A	5A	7	4P 16A					630.4009-016	630.4509-016
2	1	1			150	2A	5A	8	4P 16A					630.4009-017	630.4509-017

◯ = Switch-disconnectors
These assemblies comply with EN 60439-4 standard.
(*) MT 2P 16A + DIFF. 2P 25A.

- Safety transformer 220/24V~ - SELV
- 4m rubber cable H07RN-F

PROTECTION DEVICES					SURFACE MOUNTING	
RCBO 30 mA	MCB 16A 1P	MCB 16A 2P	MCB 16A 3P	MCB 16A 4P	MCB protected version IP44	MCB protected version IP66
					632.4009-014	32.4509-014
		2			632.4009-015	632.4509-015
			1		632.4009-016	632.4509-016
				1	632.4009-017	632.4509-017

Distribution ACS
- :1

EUROPEAN STANDARDS EN 60 439-4 CEI 17-13/4
ASC
Assemblies for costruction sites

ScameOnLine

Discover the **new application** directly on the web, www.scame.com/CombiFinder.asp

You will quickly find an assemblies already assembled, certified and ready to use.

COMBIFINDER

Note

This is just a small selection of our full range. Please contact your SCAME dealer for specific versions.

EMPTY RUBBER PANELS - IP54

GOMMA Series

Description	DIN modules	Dimension (mm)	Dissipated power (*)		
1 window, Portable with handle	12	380x260x130	20W	6	**690.4200-00**
1 window, surface mounting without handle	12	380x260x130	20W	6	**692.4200-00**

(*) According to CEI 23-49 italian standard.

RUBBER VERSIONS WITH 4-5 SOCKET OUTLETS - IP44

GOMMA Series

AVAILABLE SOCKETS - 16A					POWER SUPPLY		PROTECTION DEVICES						PORTABLE WITH CABLE AND PLUG
2P+E	3P+E	3P+N+E	2P+E	2P+E	Current	Poles	MAIN MCB	RCD 30mA	1P	1P+N	3P	4P	
5					16A	2P+E		2P 25A	5(*)	1			**690.4200-300**
2	2				32A	3P+N+E		4P 40A	2(10A)		2(10A)		**690.4200-292**
	4					3P+E		4P 40A			2		**690.4200-295**
2		1		1		3P+N+E		4P 40A	3			1	**690.4200-301**

(*) Isolator.

RUBBER VERSIONS WITH 4 + 4 SOCKET OUTLETS - IP44

GOMMA Series

AVAILABLE SOCKETS 16A					POWER SUPPLY		PROTECTION DEVICES		DOUBLE SIDED UNITS
2P+E	3P+E	3P+N+E	2P+E	2P+E	Current	Poles	MCB 1P+N - 2A	RCD 30mA	
4+4							4+4	2 4P 25A	**692.4300-69**
4+4							4+4		**692.4300-70**

Distribution assemblies TTA
- EUREKA Series plug
- 3 m rubber cable H07RN-F
- :1

EUROPEAN STANDARDS EN 60439-1 IEC 60439-1
TTA
Mass-produced assembly

ACS ASSEMBLIES WITH SAFETY AND ISOLATING TRANSFORMER - IP55

TRANSFORMER Series

Voltage (V)	Power (VA)	Sockets IP67	Cutoff switch (1P+N)	Plug switch (1P)		
230/**24**V	1.000 VA	2x2Px32A 24V	1MT 6A	2MT 16A	1	**630.011**
	1.500 VA		1MT 8A	2MT 32A	1	**630.012**
230/**48**V	1.000 VA	2x2Px32A 48V h12	1MT 6A	2MT 10A	1	**630.021**
	1.500 VA		1MT 8A	2MT 16A	1	**630.022**
230/**230**V	1.000 VA	1x2P+Ex16A 220V h6	1MT 6A	1MT 6A	1	**630.031**
	1.500 VA		1MT 10A	1MT 10A	1	**630.032**

Note: the equipment must be kept outside narrow conducting spaces.
- Plug mod. EUREKA 2P+E IP67 16A 230V 6h.
- Rubber electric cable 2x1,5 mm² H07RN-F (length 1,5 m).
- Safety transformer: SELV protection (230/24V and 230/48V).
- Isolating transformer: electric shielding protection (230/230V).
- Provided with housing mod. SCABOX complete with lifting handle.
- MCB with operating time complying with D curve diagram.

ACS IP55 panel board provided with both safety and insulated transformer

The power supply system is provided with a safety or fully insulated transformer that allows the use of electric equipment even in confined conductive spaces, confined spaces generally delimited by metal or conductive surfaces. Where it is possible for human contact to occur a safety or fully insulated transformer must be used. Examples of confined conductive spaces within the construction / building yard are; metal tanks, metal pipe systems, damp underground channels, excavations and scaffolding.

ScameOnLine

Discover the **new application** directly on the web, www.scame.com/CombiFinder.asp

You will quickly find an assemblies already assembled, certified and ready to use.

COMBIFINDER

Note

This is just a small selection of our full range. Please contact your SCAME dealer for versions with other industrial or domestic socket outlets (Italian, German, British, French and other international standards).

EMPTY ENCLOSURE

SALVAMOTORE Series

Description		
Without appliance inlet	1/10	**299.1600-00**

- Equipped DIN Rail and cable gland.

SINGLE PHASE STOP-START UNIT

SALVAMOTORE Series

Description	In (A)	Loc (kA)	Motor power (*) kW	Motor power (*) CV		
16A 2P+E 6h - 230V~ thermal device	16	-	2,2	3	1/10	**299.1693-00**
16A 2P+E 6h - 230V~thermal device+fuse	16	6	2,2	3	1/10	**299.1693-01**

(*) Motor power calculated with, rated voltage 230/400V and cos φ 0,7.
- Protection with relay, thermal device and fuse.
- With appliance inlet and 1,2m of HO7RN-F rubber cable.
- The combination relay + thermal device is set for a current not exceeding 16A.

STOP-START UNIT

SALVAMOTORE Series

Description	In (A)	Loc (kA)	Motor power (*) kW	Motor power (*) CV		
16A 3P+E 6h - 400V~ thermal device	10-14	-	4,8-7,7	6,6-10,5	1/10	**299.1686-16**

(*) Motor power calculated with, rated voltage 230/400V and cos φ 0,7.
- Protection with thermal overload relay.
- With appliance inlet and 1,2m of H07RN-F rubber cable.
- The thermal overload relay can be set on the limit current according to the motor power.

Equipment for building yards - IP55
- Appliance inlet EUREKA Series IP67 (snap-on couplet).
- Hinged cover fixed with stainless steel screws.
- Mounting by brackets.

The motor control devices have the following features:
- start-stop functions;
- emergency stop;
- thermal overload protection;
- avoid the re-start of the working machine unless there is a manual operation.

MOTOR CUT-OUT

SALVAMOTORE Series

Description	In (A)	Loc (kA)	Motor power (*) kW	Motor power (*) CV		
16A 2P+E 6h - 230V~	1,6 - 2,5	6	0,2 - 0,4	0,3 - 0,5	1/10	**299.1693-02**
	2,5 - 4,0	6	0,4 - 0,6	0,5 - 0,9	1/10	**299.1693-04**
	4,0 - 6,3	6	0,6 - 1,0	0,9 - 1,4	1/10	**299.1693-06**
	6,3 - 10	6	1,0 - 1,6	1,4 - 2,2	1/10	**299.1693-10**
	10 - 16	6	1,6 - 2,6	2,2 - 3,5	1/10	**299.1693-16**
16A 3P+E 6h - 400V~	1,6 - 2,5	6	0,7 - 1,2	1,0 - 1,5	1/10	**299.1696-02**
	2,5 - 4,0	6	1,2 - 1,9	1,5 - 2,5	1/10	**299.1696-04**
	4,0 - 6,3	6	1,9 - 3	2,5 - 4,1	1/10	**299.1696-06**
	6,3 - 10	6	3 - 4,8	4,1 - 6,6	1/10	**299.1696-10**
	10 - 16	6	4,8 - 7,7	6,6 - 10,5	1/10	**299.1696-16**

(*) Motor power calculated with, rated voltage 230/400V and cos φ 0,7.
- Protection with normal starter switch on low-voltage tripping device.
- With appliance inlet and 2m of HO7RN-F rubber cable.
- The motor starter switch can be set on the limit current according to the motor power.

PLUGS COVER IP67

ACCESSORIES

Description			
16A	2P+E	10/100	**570.90163**
	3P+E	10/100	**570.90164**